C1-201 94

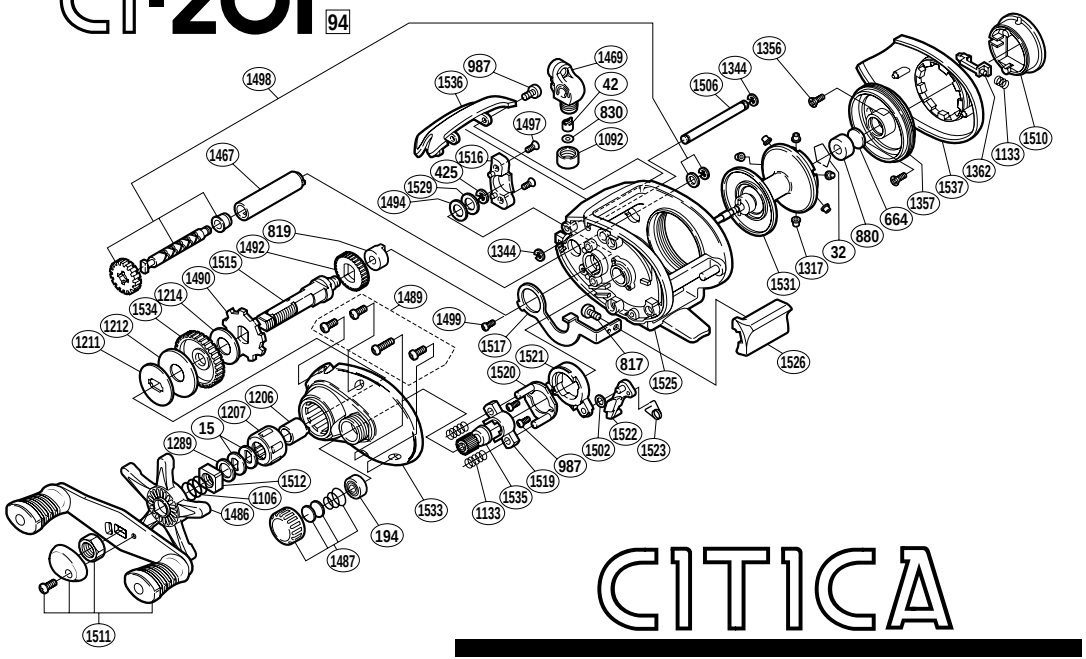

CITICA

BNT No.	PARTS NAMES	BNT No.	PARTS NAMES	BNT No.	PARTS NAMES
0015	Drag Spring Washer	1317	Brake Collars (red-6 pieces)	1512	Star Drag Nut
0032	Bearing Retainer	1344	“C”Lock	1515	Drive Shaft
0042	Line Guide Pawl	1356	Brake Case Retainer Screw	1516	Drive Shaft Cover
0194	Ball Bearing	1357	Brake Case	1517	Clutch Plate
0425	“E”Lock	1362	Turnkey Pawl	1519	Yoke
0664	Spacer (B)	1467	Level Wind Guard	1520	Clutch Cam Retainer
0817	Clutch Bar Screw	1469	Line Guide	1521	Clutch Cam
0819	Drive Shaft Bushing	1486	Star Drag	1522	Clutch Pawl
0830	Spacer (optional)	1487	Cast Control Cap Assembly	1523	Clutch Pawl Spring
0880	Spool Shaft Bushing	1489	Side Plate Screws	1525	One-Piece Frame
0987	Multi Purpose Screw	1490	Anti-Reverse Ratchet	1526	Quick-Fire II Clutch Bar
1092	Pawl Cap	1492	Idle Gear	1529	Drive Shaft Washer (A)
1106	Star Drag Spring	1494	Drive Shaft Washer (B)	1531	Spool Assembly
1133	Yoke / Turnkey Pawl Spring	1497	Drive Shaft Cover Screw	1533	Left Side Plate
1206	Roller Clutch Inner Tube	1498	Worm Shaft Assembly	1534	Drive Gear
1207	Roller Clutch Bearing	1499	Clutch Plate Screw	1535	Pinion Gear
1211	Key Washer	1502	Spacer (optional)	1536	Thumb Rest
1212	Drag Washer (C)	1506	Line Guard	1537	Right Side Plate
1214	Drag Washer (A)	1510	Turnkey Dial		
1289	Star Drag Spacer	1511	Handle Assembly		

(050708)